TO-220AB

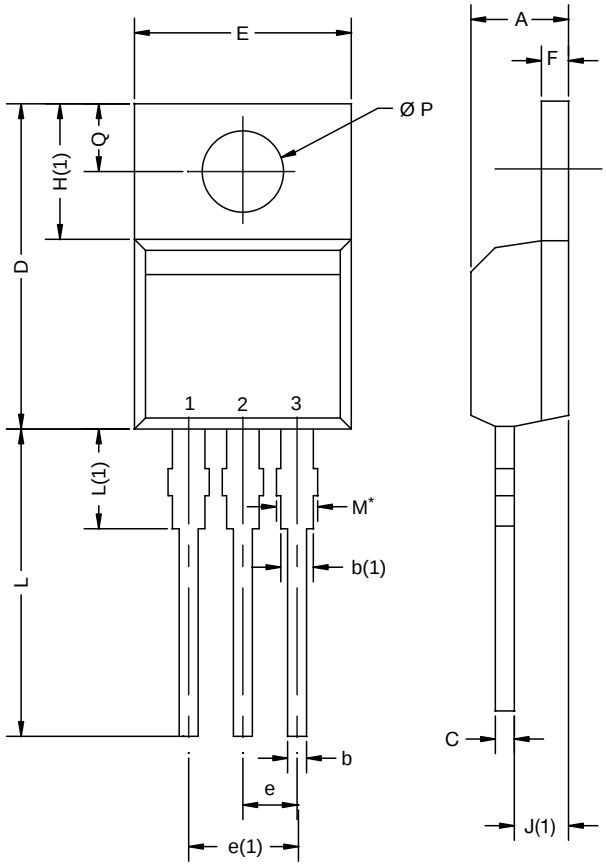

DIM.	MILLIMETERS		INCHES	
	MIN.	MAX.	MIN.	MAX.
A	4.25	4.65	0.167	0.183
b	0.69	1.01	0.027	0.040
b(1)	1.20	1.73	0.047	0.068
c	0.36	0.61	0.014	0.024
D	14.85	15.49	0.585	0.610
E	10.04	10.51	0.395	0.414
e	2.41	2.67	0.095	0.105
e(1)	4.88	5.28	0.192	0.208
F	1.14	1.40	0.045	0.055
H(1)	6.09	6.48	0.240	0.255
J(1)	2.41	2.92	0.095	0.115
L	13.35	14.02	0.526	0.552
L(1)	3.32	3.82	0.131	0.150
Ø P	3.54	3.94	0.139	0.155
Q	2.60	3.00	0.102	0.118
ECN: X12-0208-Rev. N, 08-Oct-12 DWG: 5471				

Notes

* M = 1.32 mm to 1.62 mm (dimension including protrusion) Heatsink hole for HVM

TO-220 FULLPAK (HIGH VOLTAGE)

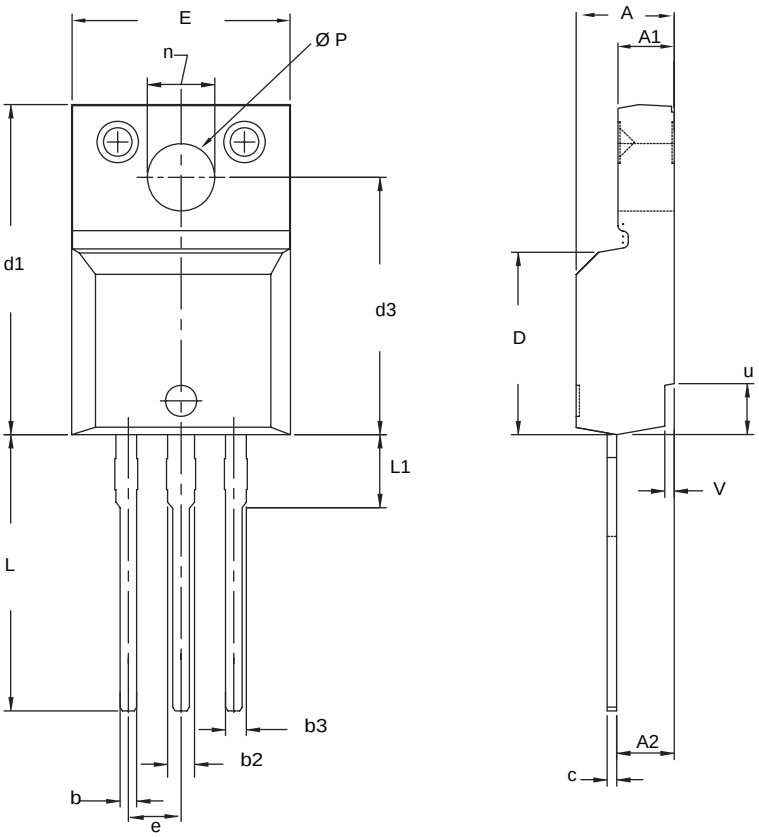

	MILLIMETERS		INCHES	
DIM.	MIN.	MAX.	MIN.	MAX.
A	4.570	4.830	0.180	0.190
A1	2.570	2.830	0.101	0.111
A2	2.510	2.850	0.099	0.112
b	0.622	0.890	0.024	0.035
b2	1.229	1.400	0.048	0.055
b3	1.229	1.400	0.048	0.055
c	0.440	0.629	0.017	0.025
D	8.650	9.800	0.341	0.386
d1	15.88	16.120	0.622	0.635
d3	12.300	12.920	0.484	0.509
E	10.360	10.630	0.408	0.419
e	2.54 BSC		0.100 BSC	
L	13.200	13.730	0.520	0.541
L1	3.100	3.500	0.122	0.138
n	6.050	6.150	0.238	0.242
Ø P	3.050	3.450	0.120	0.136
u	2.400	2.500	0.094	0.098
v	0.400	0.500	0.016	0.020
ECN: X09-0126-Rev. B, 26-Oct-09 DWG: 5972				

Notes

1. To be used only for process drawing.
2. These dimensions apply to all TO-220, FULLPAK leadframe versions 3 leads.
3. All critical dimensions should C meet $C_{pk} > 1.33$.
4. All dimensions include burrs and plating thickness.
5. No chipping or package damage.

TO-252AA CASE OUTLINE

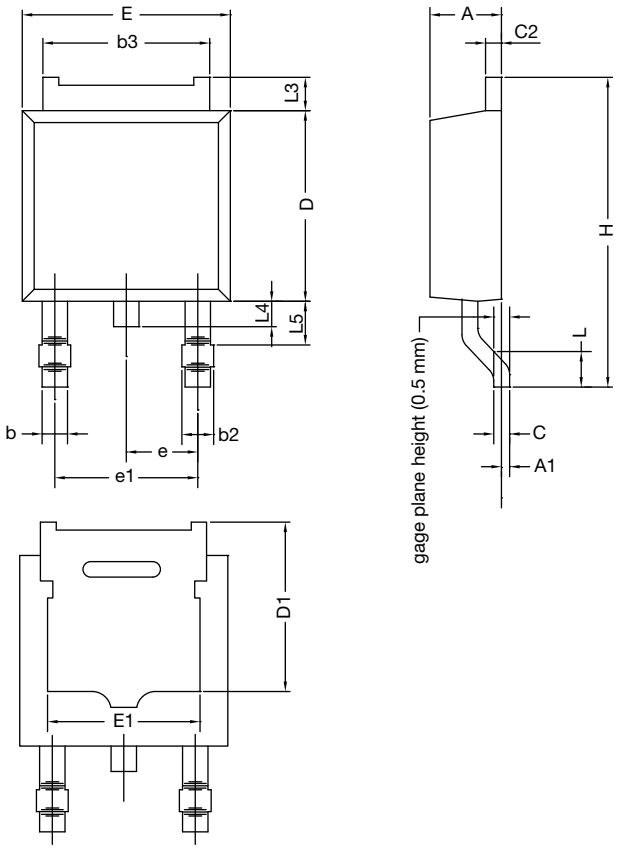

	MILLIMETERS		INCHES	
DIM.	MIN.	MAX.	MIN.	MAX.
A	2.18	2.38	0.086	0.094
A1	-	0.127	-	0.005
b	0.64	0.88	0.025	0.035
b2	0.76	1.14	0.030	0.045
b3	4.95	5.46	0.195	0.215
C	0.46	0.61	0.018	0.024
C2	0.46	0.89	0.018	0.035
D	5.97	6.22	0.235	0.245
D1	5.21	-	0.205	-
E	6.35	6.73	0.250	0.265
E1	4.32	-	0.170	-
H	9.40	10.41	0.370	0.410
e	2.28 BSC		0.090 BSC	
e1	4.56 BSC		0.180 BSC	
L	1.40	1.78	0.055	0.070
L3	0.89	1.27	0.035	0.050
L4	-	1.02	-	0.040
L5	1.14	1.52	0.045	0.060
ECN: X12-0247-Rev. M, 24-Dec-12 DWG: 5347				

Note

- Dimension L3 is for reference only.

TO-251AA (DPAK)

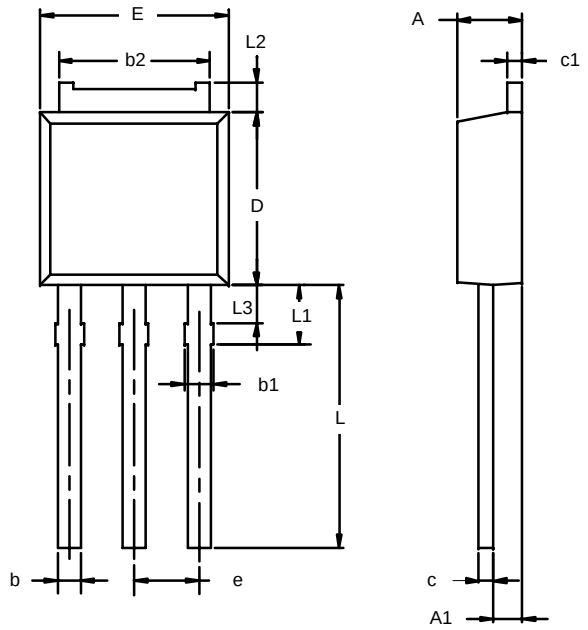

Dim	MILLIMETERS		INCHES	
	Min	Max	Min	Max
A	2.21	2.38	0.087	0.094
A1	0.89	1.14	0.035	0.045
b	0.71	0.89	0.028	0.035
b1	0.76	1.14	0.030	0.045
b2	5.23	5.43	0.206	0.214
c	0.46	0.58	0.018	0.023
c1	0.46	0.58	0.018	0.023
D	5.97	6.22	0.235	0.245
E	6.48	6.73	0.255	0.265
e	2.28 BSC		0.090 BSC	
L	8.89	9.53	0.350	0.375
L1	1.91	2.28	0.075	0.090
L2	0.89	1.27	0.035	0.050
L3	1.15	1.52	0.045	0.060
ECN: S-03946—Rev. E, 09-Jul-01 DWG: 5346				

Note: Dimension L3 is for reference only.

Disclaimer

ALL PRODUCT, PRODUCT SPECIFICATIONS AND DATA ARE SUBJECT TO CHANGE WITHOUT NOTICE TO IMPROVE RELIABILITY, FUNCTION OR DESIGN OR OTHERWISE.

Din-Tek Intertechnology, Inc., its affiliates, agents, and employees, and all persons acting on its or their behalf (collectively, "Din-Tek"), disclaim any and all liability for any errors, inaccuracies or incompleteness contained in any datasheet or in any other disclosure relating to any product.

Din-Tek makes no warranty, representation or guarantee regarding the suitability of the products for any particular purpose or the continuing production of any product. To the maximum extent permitted by applicable law, Din-Tek disclaims (i) any and all liability arising out of the application or use of any product, (ii) any and all liability, including without limitation special, consequential or incidental damages, and (iii) any and all implied warranties, including warranties of fitness for particular purpose, non-infringement and merchantability.

Statements regarding the suitability of products for certain types of applications are based on Din-Tek's knowledge of typical requirements that are often placed on Din-Tek products in generic applications. Such statements are not binding statements about the suitability of products for a particular application. It is the customer's responsibility to validate that a particular product with the properties described in the product specification is suitable for use in a particular application. Parameters provided in datasheets and/or specifications may vary in different applications and performance may vary over time. All operating parameters, including typical parameters, must be validated for each customer application by the customer's technical experts. Product specifications do not expand or otherwise modify Din-Tek's terms and conditions of purchase, including but not limited to the warranty expressed therein.

Except as expressly indicated in writing, Din-Tek products are not designed for use in medical, life-saving, or life-sustaining applications or for any other application in which the failure of the Din-Tek product could result in personal injury or death. Customers using or selling Din-Tek products not expressly indicated for use in such applications do so at their own risk. Please contact authorized Din-Tek personnel to obtain written terms and conditions regarding products designed for such applications.

No license, express or implied, by estoppel or otherwise, to any intellectual property rights is granted by this document or by any conduct of Din-Tek. Product names and markings noted herein may be trademarks of their respective owners.

Material Category Policy

Intertechnology, Inc. hereby certifies that all its products that are identified as RoHS-Compliant fulfill the definitions and restrictions defined under Directive 2011/65/EU of The European Parliament and of the Council of June 8, 2011 on the restriction of the use of certain hazardous substances in electrical and electronic equipment (EEE) - recast, unless otherwise specified as non-compliant.

Please note that some documentation may still make reference to RoHS Directive 2002/95/EC. We confirm that all the products identified as being compliant to Directive 2002/95/EC conform to Directive 2011/65/EU.

Intertechnology, Inc. hereby certifies that all its products that are identified as Halogen-Free follow Halogen-Free requirements as per JEDEC JS709A standards. Please note that some documentation may still make reference to the IEC 61249-2-21 definition. We confirm that all the products identified as being compliant to IEC 61249-2-21 conform to JEDEC JS709A standards.